9

Short-Term Advanced Forecasting and Storage-Based Power Quality Regulation in Wind Farms

Juan Mendez and Javier Lorenzo
Universidad de Las Palmas de Gran Canaria
Spain

1. Introduction

This Chapter contains the results of our research activities in the line to reduce both: the uncertainties in power forecasting and the lack in power quality for Wind Farms connected to public grids. Our approach is a suite of studies that are focused on power forecasting for Electricity Markets and also an innovative simulation technique to evaluate the quality by using a coupled storage systems as water reservoirs, inertial systems or chemical batteries.

The use of renewable energy sources (RES) in electricity generation has many economical and environmental advantages, but has a downside in the instability and unpredictability introduced into the public electric systems. The more important renewable sources, wind and solar power, are mainly related to the weather in a local geographic area. However, the weather is a chaotic system with limited predictability. Many countries follow two trends in the development and planning of their public electric systems; the first is the increase in the generation power from RES and the second one is the transition to open electricity markets. These two trends have a common impact on the public grids, because they both increase the number of agents in the system and the level of uncertainty in the balance between generation and load.

The access of more and bigger RES electricity producers can increase the risk of fail and decrease the service quality. That risk can be reduced by increasing the power reserve based on high response gradient systems. These, e.g. diesel or hydraulic, have a high speed of change in their generated power, that is suitable to balance the frequent sudden and unpredictable changes of RES-based electricity production. Therefore, the positive impact of the use of RES on the cost of fuel consumption would have a negative impact on the global cost of electricity systems.

The control and planning of public electric systems covers a widespread set of levels, ranging from the hundred millisecond domain associated to the frequency and voltage controlErlich et al. (2006), to the yearly planning domain. Precise regulations for these levels are the concern of the national Electricity Authorities of each country as well as to supranational agencies. The EC Project STORIESPanteri (2008) provides an overview of existing regulations and the respective legislative framework related to RES implementation at a European level. In each national system, the Transmission System Operator(TSO) deals with the management of the electric system in the different control and planning levels. With the increasing penetration

of RES systems, the TSO becomes concerned with the impact on system stabilityEriksen et al. (2005).
The forecasting of RES power production is a basic tool in the reduction of these high operative reserve, which must be ready to be used. According to the practical experiences of E.ON, the largest German electric company, wind power is only as reliable as the weather forecastingE.ON-Netz (2004). If the wind power forecast differs from the actual infeed, the TSO must cover the difference by using the reserves, which must amount to 50-60% of the installed wind power. According to E.ON, the expected maximum forecast deviation is more important that the mean forecast error. This is because even if the actual infeed deviates from the forecast level on only a few days of the year, the TSO must also be prepared for this improbable eventuality and have sufficient capacity available, *spinning reserve*, for a reliable supply to still guaranteed and the correct balance between generation and load to be restored.
The Electric Authorities of many different countries have included the power forecasting in its Regulatory Norms in order to preserve the quality of the electricity supply. The planning of an Electric System requires several levels related to different time scales and whether forecasting requires also different levels. Very close short-term forecasting, or nowcasting, is the immediate prediction in a time scale ranging from some minutes to several hours. Short-term forecasting address a time scale that ranges from one to three days, while medium-term forecasting covers from four days to several weeks.
The statistical approach for short-term wind prediction has been used due to the system complexity of whether and the chaotic fluctuations of wind speed. The statistical models such as ARMA, ARX and Box-Jenkins methods have been used historically for short-term wind forecasting up to few hours ahead Landberg et al. (2003); Nielsen & Madsen (1996); Nielsen et al. (2006). Giebel Giebel (2003) reports some of the statistical state of the art models and methods for wind power forecasting which have been developed and used, such as time series models for up to a few hours by means of statistical approaches and neural networks, as well as models based on Numerical Weather Prediction(NWP).
The simplest time scale in power predictions is the nowcasting, which can be carried out by using the time series analysis. The short-term scale requires the cooperation between statistical and NWP tools, in regional and mesoscale weather models and cooperating with predictive systems as HIRLAN and MM5. The power forecasting for RES in Spanish Regulations is related to hourly periods of planning of the electricity market. All the power supplies and demands of the energy agents must be related to these hourly periods. The regulations for the short-term Spanish Electricity Market comprise two steps:

Short-term Forecasting. The RES producers, solar and wind farms, with power greater than 10 MW must provide 30 hours ahead the power forecasting for every hourly period of a full range of 24 hours.

Nowcasting. One hour ahead of each hourly period, corrections to the previous values can be sent to the Electricity Authority.

This means that in the nowcasting time scale, the computation of the predicted value must be carried out for the period covering two hours ahead. The second step can be carried out by using time series approaches, but the first requires the cooperation with NWP tools.
Artificial Neural Networks (ANN)Haykin (1999) have been widely used for modeling and predictions in the field of renewable energy systems Kalogirou (2001); Li et al. (1997) because they are able to handle noisy, incomplete data and non-linear problems to perform predictions and classifications Alexiadis et al. (1998); Kandil et al. (2006); Zhang et al. (1998). Hippert et

al Hippert et al. (2005) have addressed the construction, and evaluation, of their performance of very large ANNs in electric systems to forecast the load profile. Recurrent ANN Mandic & Chambers (2001) have been used as generalizations of predictive systems as ARMA. Also, they can be used to generalize linear predictive systems as Kalman filter Haykin (2001). Recurrent and recurrence in each layer, called multilayer recurrent, architectures have been also used in wind power predictionLi (2003).

Many studies about the use of ANN in wind power have been preformed, but the criteria to evaluate their performance have been mainly based on error parameters. Based on more modern standard protocol for forecastingMadsen (2004), the published results will provide improvement criteria over the persistence or references models of its same place. Persistence forecasting is a simple model that is intrinsic to the data, that is, it is a no algorithm approach. Any new proposed algorithm is so good or bad as how much is able to overtake the persistence. The use of ANN can provide a suitable procedure to beat it and other reference model based on the Wiener predictive filter. An application is presented applying the standard protocols with Feed Forward(FNN) and Recurrent Neural Networks(RNN) architectures in the background of the requirements for Open Electricity Markets.

The prediction in the time scale of nowcasting can be carried out by using the time series analysis approach. The short-term scale requires the cooperation between statistical and NWP tools, in regional and mesoscale weather models. In many countries the power forecasting for RES is related to hourly periods of planning of the electricity market. All the power supplies and demands of the energy agents must be related to these hourly periods. For example, as has been presented, the regulations for the short-term Spanish Electricity Market comprise two steps. In the step 1 in short-term time scale, the RES producers must provide the power forecasting for every hourly period of a full range of 24 hours 30 hours in advance. In step 2 in the nowcasting time scale, one hour ahead of each hourly period, corrections to the previous values can be sent to the Electricity Authority. This means that at the end of the hour h, the RES producer must send the corrections for the expected value of the average power, $\widehat{P}_{h+2}$, for hour $h+2$.

The prediction based on persistence is the simplest model and is based on the assumption of a high inertia in the subjacent physical model. If $y(t)$ is the value at time t of a time series, in persistence model the predicted value for k time ahead is: $\widehat{y}(t+k) = y(t)$. The simple persistence model can be overtaken by other. more advanced, models that involve persistence-like information. A reference model to compare different forecasting models has been proposed Madsen (2004); Nielsen et al. (1998). It includes very short-term information, such as persistence, and long-term information. This proposed reference model is an extension of the pure persistence defined by the linear expression: $\widehat{y}(t+k) = b + ay(t)$.

In an Electricity Market applications we have two kinds of power values, the spot power $P(t)$ and its hourly average P_h. For the TSO, the spot power is very important to ensure the system stability at any time, but in the Electricity Market the hourly average is that required to RSE agents. The reference model for wind power forecasting proposed by Madsen Madsen (2004) can be applied for hourly average power such as that required in the Spanish regulation as: $\widehat{P}_{h+2} = A_0 P_h + (1 - A_0)\overline{P}$, where A_0 and $\overline{P}$ are parameters computed from large-term training information. It is difficult to beat this reference model because is based on the shortest-term information, P_h, and in the longest-term information, $\overline{P}$.

Even if the forecasting techniques for RES power were perfect, the problems that its high penetration introduce in grids would not be avoided. Figure 1 shows a power series $P(t)$ in time steps of one minute, and their hourly average P_h. That last one is the best prediction

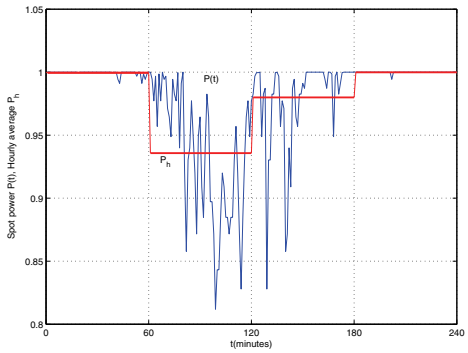

Fig. 1. Spot power and its hourly average for a wind power generator. Even though we can have the perfect hourly prediction, the lack of quality in spot power can be significative

that we can achieve. Even using this ideal case, the difference between the spot power $P(t)$ and the best estimated planed power $\widehat{P}_h = P_h$ is significant. The lack of quality in the electricity production based on RES, such as wind power, must require of higher power spinning reserves that entail additional costs. If the penetration of RES based power increases significantly, those costs will be billed to the RES producer by means of penalties. These are, or will be, imposed by the Electricity Authorities associated with the lack of quality in the fed energy.

The variance shown in every hourly period can be avoided by using short-term storage systems that reduce the impact of the chaotic behavior of the local weather in the public grids. Short-term storage systems can be implemented by using different technologies such as electric batteries, hydraulic reservoirs or inertial systems. Lazarewicz and Rojas Lazarewicz & Rojas (2004) identify some of the basic problems involved in frequency regulation and their solution by using large batteries of inertial systems. Drouilhet Drouilhet (1999) presents a wind power system with a diesel generator and a short-term energy storage using electric batteries. This system focuses on the power flow management, frequency and voltage control for high penetration of wind sources, mainly in isolated rural electrical systems. Its conclusion is that in conventional power generation systems, the short-term load variations are usually small and the main power source can supply the demand, but in the high penetration wind power systems the power feed to the system is stochastic in nature and highly variable. EdsingerEdsinger et al. (1978) focuses on the evaluating of the economic feasibility as well as on the general performance of wind energy systems with energy storage options.

An application where the use of storage energy systems have been used extensively is in space applications where the supply of solar power changes along the orbit. The use of hybrid system of batteries and flywheels has been proposed and simulated Beaman & Rao (1998). To avoid the inertial problems, two or more counter-rotating wheels are used to produce null angular momenta. The design of such systems requires the definition of the battery and flywheel charging control schemes and the solar array regulation. The main advantages of inertial storage systems that have been proposed for satellite and space oriented applications is its reduce mass Fausz & Richie (2000); Wilson et al. (2005). The simulation of these systems was conducted using the power model for the Flywheel Attitude Control,

Energy Transmission, and Storage (FACETS), which is constructed by using blocks provided in the Matlab and Simulink packages.
Our approach is to study the energy and power management rather than the modeling and simulation associated with any specific technology, device or technical solution. We agree that a first level of a simulation can be a general one based on the power and energy flows and transfer, while a more detailed simulation of a defined solution, which must use defined models for wind farmsTande et al. (2007) and grid interactionHansen et al. (2002), can be achieved after the analysis of the results obtained in the power and energy oriented simulation. For example, a general simulation can provide the total amount of energy storage needed for an RES system based on its logged power data. At this stage, it does not matter which kind of technology is used in a more detailed forward modeling. This paper includes a mathematical model of power and energy transfer between the RES source, the energy storage and the public grid.

2. Power forecasting by using ANN

Persistence is the simplest model for forecasting. It is based on the assumption of a high inertia in the subjacent physical model. If $y(t)$ is the value at time t of a time series, in persistence model the predicted value for k times ahead is: $\widehat{y}(t+k) = y(t)$. This kind of forecasting is really simple but can be very useful in practical, because it can be used as reference model to compare different theoretical and practical applications. Any proposal of a new model or approach that requires some computational resource is required to have at least a better performance that this simple one. The level of improvement over this reference model must be a level of utility of the additional formal and computational cost. A high value in an error parameter, as MAE or RMSE, in a hardly predictable site can be a better result that a small value in a easily predictable site. However there are not a parameter to define what site has a hardly or easily predictable wind. A option is the use the own persistence as the reference to which compare the performance of proposed algorithms.
The pure persistence model can be overtaken by other model that involve persistence-like information. A reference model to compare different forecasting models has been proposed Madsen (2004); Nielsen et al. (1998). It is more advanced because it includes very short-term information, as persistence, and long-term information. This proposed reference model is an extension of the pure persistence as a linear expression: $\widehat{y}(t+k) = b + ay(t)$. A detailed analysis allows to show that is really the first order case of a more general linear predictive filter, as the Wiener filter with general expression:

$$\widehat{y}(t+k) = B + \sum_{i=0}^{m} A_i y(t-i) \tag{1}$$

where coefficients A_i and B can be computed from the matrix containing the cross correlation between $y(t+k)$ and $y(t-i)$. The constant parameter is $B = (1 - \sum_{i=0}^{m} A_i)\overline{y}$, where $\overline{y}$ is the large-term average value of $y(t)$. For the simplest case of first order filter: $\widehat{y}(t+k) = B + A_0 y(t)$, the value of the coefficient is:

$$A_0 = \frac{\int [y(t+k) - \overline{y}][y(t) - \overline{y}]dt}{\int [y(t) - \overline{y}]^2 dt} \tag{2}$$

In an Electricity Market we have two kind of power values, the spot power $P(t)$ and its hourly average P_h. For the TSO, the spot power is very important to assure the system stability at

any time, but in the Electricity Market the hourly average is the required to RSE agents. The proposed reference model for wind power forecasting by Madsen Madsen (2004), is applied for hourly average power in nowcasting as the required in the Spanish regulation as:

$$\widehat{P}_{h+2} = A_0 P_h + (1 - A_0)\overline{P} \tag{3}$$

where A_0 and $\overline{P}$ are parameters computed from large-term training information. This reference model, which we can call as improved persistence or Wiener persistence, is harder to beat because is based in the shortest-term information, P_h, and in the longest-term information, $\overline{P}$.

The basic theory for using ANN in prediction, its architectures and algorithms are in the area of adaptive and predictive linear filterMandic & Chambers (2001). The use of ANN has generated generalizations that has introduced improvements in the original linear models by allowing the construction of nonlinear predictive systems. The relationship between ANN, in special recurrent architectures, with linear predictive systems as ARMA allows nonlinear generalizations of previous statistical linear approaches. A generalization of recurrent ANN is the multilayer recurrentLi (2003); Mandic & Chambers (2001). In the wind power forecasting the problem can be formulated by using Feed Forward(FNN), without feedback, or Recurrent(RNN) ones:

$$\widehat{P}_{h+2} = F\left[V_h, \ldots, V_{h-n+1}, P_h, \ldots, P_{h-m+1}\right] \tag{4}$$

The used training procedure was the Bayesian regularization Foresee & Hagan (1997); MacKay (1992) which updates the weight and bias values according to the Levenberg-Marquardt Levenberg (1944); Marquardt (1963) optimization procedure. It uses as goal function a combination of squared errors and weights, and then determines the correct combination so as to produce a network that generalizes well. The Bayesian regularization implementation that has been used is the implemented in the training function *trainbr* of the Neural Networks Toolbox of MATLABDemuth et al. (2008). The NARX architecture have been used for RNN with the same window size for input data, the wind speed, and feedback data, the wind power.

2.1 Results in power forecasting

We have used a wind data series acquired in Gran Canaria Island(Spain). The wind speed series comprise about 33 days data from a meteorological tower in time steps of one minute. Wind power series are obtained from the wind speed at 40 meters high and from a power transfer function with 5 and 12.5 m/sec cut-off values. Relative values about the nominal values, $P(t)/P_n$, are used in the power series. The data set was split in two subset, the train and test. The train data is 2/3 of the global data. The standard protocol for performance evaluation suggested by MadsenMadsen (2004) was used. It includes the definition of the Evaluation Criteria(EC) BIAS, MAE, RMSE and SDE, and also the improvement over the reference model which are computed in percent value as:

$$Imp_{ref,EC}(\%) = 100\frac{EC_{ref} - EC}{EC_{ref}} \tag{5}$$

Many training procedures of ANN use optimization procedures that run from initial random states. The optimization tries to reach a minimum value of some goal function, but the reached value and the trained network depend on the initial random state. In the practice, that means that the performance of a trained ANN has some random degree. To reduce the uncertainty

	Pers. Ref.	RNN1	RNN2	RNN3	RNN4	RNN5
Delay		(2:3)2	(2:5)4	(2:7)6	(2:7)6	(2:7)6
Hidden Nodes		80	40	10	40	60
BIAS	0.6 0.9	0.5 ± 0.1	0.3 ± 0.1	0.1 ± 0.3	0.3 ± 0.4	0.3 ± 0.1
MAE	14.5 15.3	15.5 ± 0.2	15.3 ± 0.1	15.7 ± 0.5	15.3 ± 0.2	$15.3 \pm 0,1$
RMSE	23.7 22.3	22.3 ± 0.3	21.6 ± 0.1	22.5 ± 1.2	21.5 ± 0.1	21.6 ± 0.1
SDE	23.7 22.3	22.4 ± 0.3	21.6 ± 0.1	22.5 ± 1.2	21.6 ± 0.1	21.6 ± 0.1
Imp_MAE		$-0.4\pm, 1.2$	1.1 ± 0.5	-2.5 ± 3.3	0.6 ± 1.0	0.4 ± 0.9
Imp_RMSE		0.0 ± 1.2	3.3 ± 0.3	-1.0 ± 5.3	3.3 ± 0.6	3.2 ± 0.6
Imp_SDE		-0.1 ± 1.2	3.2 ± 0.3	$-1.1\pm, 5.3$	3.2 ± 0.6	3.1 ± 0.6

Table 1. Comparative results for two hours ahead prediction by using several RNN configurations trained with Bayesian regularization. All Evaluation Criterion and their improvements over the reference model are in percent(%) normalize to the nominal power. The mean and standard deviation, $\mu \pm \sigma$, values are provided for 25 training trials

	FNN1	FNN2	FNN3	FNN4	FNN5	FNN6
Delay	(2:4)3	(2:4)3	(2:6)5	(2:6)5	(2:11)10	(2:11)10
Hidden Nodes	3	6	5	10	10	20
BIAS	3.0 ± 1.8	4.0 ± 2.5	1.4 ± 0.3	1.4 ± 0.9	2.4 ± 2.4	3.2 ± 3.1
MAE	16.2 ± 1.0	16.8 ± 1.2	15.7 ± 0.4	16.0 ± 0.7	16.7 ± 1.3	17.4 ± 1.7
RMSE	22.7 ± 0.4	22.9 ± 0.6	22.2 ± 0.4	22.4 ± 0.5	22.6 ± 0.8	23.4 ± 1.3
SDE	22.5 ± 0.2	22.5 ± 0.3	22.2 ± 0.3	22.4 ± 0.5	22.5 ± 0.6	22.0 ± 1.1
Imp_MAE	$-4.8\pm, 6.5$	-8.6 ± 8.0	-1.3 ± 2.7	-3.1 ± 4.8	-7.4 ± 8.0	-12.3 ± 10.7
Imp_RMSE	-2.1 ± 2.0	-2.9 ± 3.0	2.7 ± 1.6	-0.6 ± 2.3	-1.5 ± 3.4	-4.7 ± 5.8
Imp_SDE	-1.0 ± 0.9	-0.8 ± 1.2	$0.4\pm, 1.5$	-0.4 ± 2.1	-0.5 ± 2.5	-2.9 ± 5.0

Table 2. Comparative results by using several FNN networks configurations. Additional data are the same as in Table 1

in the results, we provide the mean and the standard deviation obtained from 25 training trials as: $\mu \pm \sigma$. Following the suggestion of ZangZhang et al. (2001) that users should pay more attention to selecting the number of input nodes, we have cross correlated the power with itself and correlated it with the wind speed and concluded that the highest values are for offsets until the range of 4-6 hours back. It means that the size of the more useful data window must be around this range.

Tables 1 and 2 contain the results for several configurations of RNN and FNN respectively. Table 1 contains also the error values for the persistence and reference model. The computation of the reference model data was performed by using the train set, its parameters are: $A_0 = 0.82$ and $\overline{P} = 0.68$. The reported results are related to architectures including one hidden layer. The experiments have shown that more layers increases the computational cost and have no better performance. In both tables, the delays are taken in relation to the prediction time; they are represented as: $(h_1 : h_2)w$, where $w = h_2 - h_1 + 1$ is size of the time window. In all cases $h_1 = 2$ to met the regulations. Remark that the values of BIAS and MAE are related to the first moment of the error, therefore they are related to the generated power, but the values of RMSE and SDE are related to the second order moment and the variance of the error.

All the tested RNN architectures perform better on BIAS values, such as significatively reduce the level in relation to the reference model and the persistence. It means that the feedback of RNN architectures systematically corrects the biased offset in the prediction. The FNN architectures without such feedback are systematically biased. The inclusion of innovation filters can be needed for the FNN case but is no necessary for the RNN one. However, in

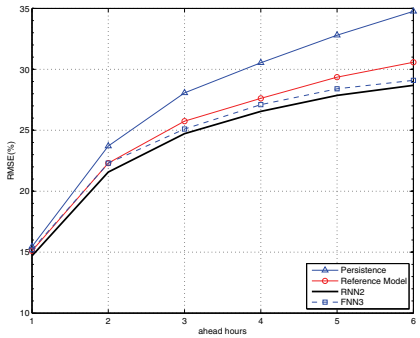

Fig. 2. Comparative RMSE of several models in the very short-term prediction

MAE criterium the persistence value is not beaten neither reference nor any tested ANN architecture. The variance of the error provided by RMSE and SDE criteria are outperformed by some RNN architectures in relation to persistence, reference model and FNN. The range of parameters that provide better results are around values 4 and 6 for windows size, and around 40 for hidden nodes. The use of narrow windows or lower number of hidden nodes performs worse. There are not tradeoff between reducing the window size and increasing the hidden nodes as shows on the RNN1 case. The increasing of hidden nodes does not performs much better as is shown in RNN6 case. The FNN architectures are more unstable, eg. the FNN3 have a good improvement of 2.7 in mean value in the RMSE criterium, but has a big standard deviation value of 1.6. It is unstable if compared with the RNN2 case with 3.3 value in mean and 0.3 value in standard deviation.
Figure 2 shows the comparative performance in several hours ahead for the RMSE criterium. The included models are the persistence, the reference model the RNN2 and the FNN3 cases. It is shown that the reference model performs much better that the persistence and both ANN cases outperform the reference model. Also it is shown that the relative efficiency of the predictive models of ANN in relation to persistence increases when increases the ahead hours.

3. Mathematical model of power quality

The outline of the generic model of a RES producer coupled to a energy storage and connected to a public grid is shown in Figure 3. The RES provides a power $P(t)$ that varies according the wind speed or sun radiation. The power planned to be sent to the grid in the hourly period is P', its value had been computed by means of some forecasting procedure before being sent to the TSO. The power that the system is effectively sending to the grid is $P_o(t)$. The difference $P_o(t) - P'$ is the deviation between the planned and the fed power; this difference is logged by the measurement systems of the TSO and the control system. These values will provide some quality parameters that will reduce the economic billing of the RES producer. This paper focuses only on the technical problem of the energy flows and on the measurement of the quality parameters and does not address the economic downside that is strongly dependent on the National Regulations of each country.
If no storage system is used, $P_o(t) = P(t)$, the penalties are related to the chaotic evolution of the local weather and some basic freedom degrees of the wind power system, eg. the pitch regulation of the blades. Precise forecasting procedures can reduce such impact but only

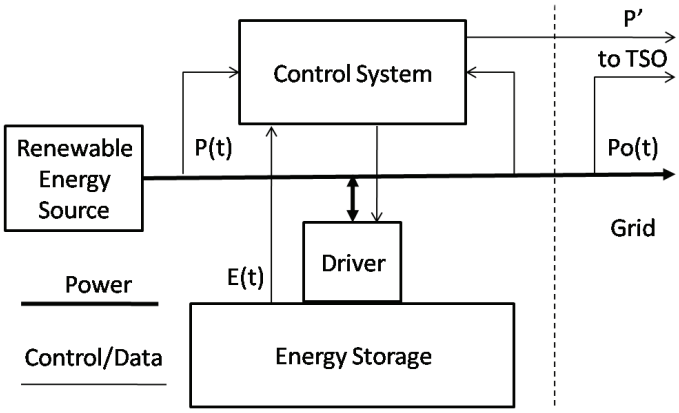

Fig. 3. The Storage and Energy Management System

partially, because most of the Electricity Markets are related to hourly periods, and one hour is too long a time period to have constant wind speed.
The National Regulations of some countries with high RES penetration have defined some quality constraints for the divergences and its economical downsides. In this paper, we adopt a simplified model: the energy sent to the grid must meet some quality constraints if penalties are to be avoided. It must be in an offset band such as $P' - \Delta \leq P_o(t) \leq P' + \Delta$. The Δ value is defined by the Grid Regulations and it can be defined as a fraction, δ, of the nominal power: $\Delta = \delta P_n$.
We define two logical conditions, the *into band* one when the output power is within the offset band, $P_o(t) \in P' \pm \Delta$, and the converse *out band* condition when the output power is outside this offset band $P_o(t) \notin P' \pm \Delta$. We can introduce some measures of energy amount and quality. The raw energy provided by the RES generator E_{res} and the energy feed in the grid E_{grid} are defined as follows:

$$E_{\text{res}} = \int P(t)dt \qquad E_{\text{grid}} = \int P_o(t)dt \tag{6}$$

If no storage system is used, both values are the same. The planned energy, E_{planne} and the energy feed into the grid outside of the quality band are expressed as:

$$E_{\text{planned}} = \int P'dt \qquad E_{\text{out}} = \int_{P_o(t) \notin P' \pm \Delta} P_o(t)dt \tag{7}$$

Moreover, we can introduce the excess or deficiency of energy feed when the system is out band as:

$$E_{\text{deviation}} = \int_{P_o(t) \notin P' \pm \Delta} |P_o(t) - P'|dt \tag{8}$$

3.1 Modeling the storage subsystem

A simplified model of the storage subsystem is composed of two parts: the energy storage itself and the driver or set of physical devices(electronic, electrical and mechanical) that allows the storage and recovery processes. The driver subsystem is an abstract wrapper of a complex

system involving very different technologies. The energy storage can be implemented by electric batteries or hydraulic reservoir, while the driver can be a system of power electronics or water turbines and pumps. We will suppose that the energy amount is an observable variable by mean of some suitable sensors. Let $E(t)$ and $E_{\max}$ be the stored energy and the maximum energy capacity of the storage subsystem, verifying: $0 \leq E(t) \leq E_{\max}$. The main issue in the modeling is the energy conservation equation. However, a detailed model is required to take account of the efficiency in the storage/recovery processes. The changes in the stored energy are defined as:

$$\frac{dE}{dt} = \dot{E}_{\text{in}} - \dot{E}_{\text{out}} - \dot{E}_{\text{loss}} \tag{9}$$

where $\dot{E}_{\text{in}}$ is the input rate in the storage phase, $\dot{E}_{\text{out}}$ is the rate in the energy recovery phase and $\dot{E}_{\text{loss}}$ is the rate of energy lost in the storage itself. The increase in the stored energy is the following when $E < E_{\max}$:

$$\dot{E}_{\text{in}} = \begin{cases} \eta_s[P(t) - P'] & P(t) > P' + \delta_1 \\ 0 & \text{otherwise} \end{cases} \tag{10}$$

where η_s is the efficiency of the driver in the storage phase, and $\delta_1 \leq \Delta$. The decrease of energy in the recovery phase is the following when $E > 0$:

$$\dot{E}_{\text{out}} = \begin{cases} \frac{1}{\eta_r}[P' - P(t)] & P(t) < P' - \delta_2 \\ 0 & \text{otherwise} \end{cases} \tag{11}$$

where η_r is the efficiency of the recovery phase and $\delta_2 \leq \Delta$. It is possible to model some losses as a ratio of the stored energy:

$$\dot{E}_{\text{loss}} = -\lambda E \tag{12}$$

where λ is a decay factor. The efficiency factors η_s and η_r in a hydraulic system are the efficiency of the pump in storage phase and the turbine in the recover one respectively. The output power that is sent to the grid, $P_o(t)$, is:

$$P_o(t) = \begin{cases} P' & P(t) > P' + \delta_1 \wedge E < E_{\max} \\ P' & P(t) < P' - \delta_2 \wedge E > 0 \\ P(t) & \text{otherwise} \end{cases} \tag{13}$$

One additional constraint can be introduced by defining an upper value for the maximum gradient for energy change, $|dE/dt| < D\max$, which is the maximum power of the driver system.

We have designed a basic object to simulate storage related problems with limited upper and lower capacities. This basic object is related to the following differential equation involving $x(t)$ as the data, which is the rate of change of the stored value, and $y(t)$ which is the stored value itself:

$$\frac{dy}{dt} + \lambda y = \eta\, x(t) \qquad y(t) \in [0, y_{\max}] \qquad \left|\frac{dy}{dt}\right| \leq d_{\max} \tag{14}$$

where the efficiency depends on the direction of the storage/recovery process.

$$\eta = \begin{cases} \eta_s & x(t) \geq 0 \\ \frac{1}{\eta_r} & x(t) < 0 \end{cases} \tag{15}$$

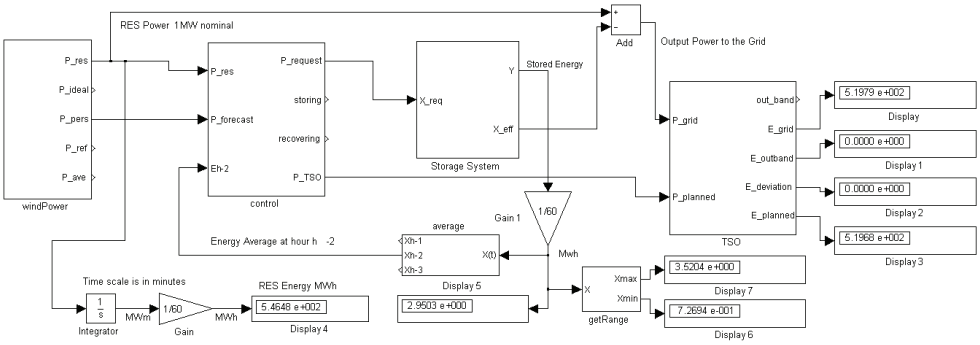

Fig. 4. Blocks in the modeling and simulation

Figure 4 shows the blocks of the modeling and simulation systems. The block Storage implements the defined model of a generic storage system focused on the power and energy management. The data source of the system is provided by the block windPower, which provides the spot power and some model of basic forecasting. It is implemented as a wrapper of a MATLAB file containing the power series in time steps of one minute and the whole series comprises 33 days. These data are obtained from wind speed series and a transfer function for a pitch regulated wind generator with values of 4 m/sec and 13 m/sec for cut-off and saturation respectively. The power is constant at the nominal value to the 25 m/sec limit, which is never reached in the series. The block windPower also provides some values of three basic forecasting models for hourly periods. The simplest model is the persistence model, which provides the predicted value: $\widehat{P}_{h+2} = P_h$. The second forecasting model is that suggested as the reference model Madsen (2004); Nielsen et al. (1998), which provides the predicted values: $\widehat{P}_{h+2} = a_2 P_h + (1 - a_2)\overline{P}$, where $\overline{P}$ is a long-term average of the available data of source power and a_2 is the correlation coefficient between P_h and P_{h+2}. These values in our case are: $a_2 = 0.82$ and $\overline{P} = 0.68$. The last forecasting model is not actually a forecasting, we called it the ideal forecasting because is the best, and unreal, prediction that can be achieved: $\widehat{P}_{h+2} = P_{h+2}$. It is included only for testing purposes, because this ideal and unreal forecasting does not solve the problems concerning the lack of quality in the power fed to the grid.

By simulating the systems we have experienced that the storage system becomes systematically empty or full depending on the configuration parameters. In those states the system can neither store nor recover energy to regulate the output power, because it runs into its non-linear zones. To avoid that the energy storage systematically becoming full or empty, a factor of innovation can be introduced in the planned power k hours ahead as:

$$\widehat{P}^{(inv)}_{h+k} = \widehat{P}_{h+k} + k_1(E_h - E_{\text{obj}}) \tag{16}$$

where E_h is the average stored energy in the h hour, k_1 is a small constant parameter and E_{obj} is some objective level of storage. This strategy corrects the systematically biases and non linear states. The Control block implements the storage strategy. An additional parameter has been added to avoid feeding power to the grid at power lower than a defined minimum value. This $P_{\min}$ value and the lower threshold δ_2 in Equation (13) mean that no power is fed to the grid lower than the $P_{\min} - \delta_2$ value. It computes the planned power for each two hours ahead period and sends it to the TSO block. At every simulation step it computes the power balance

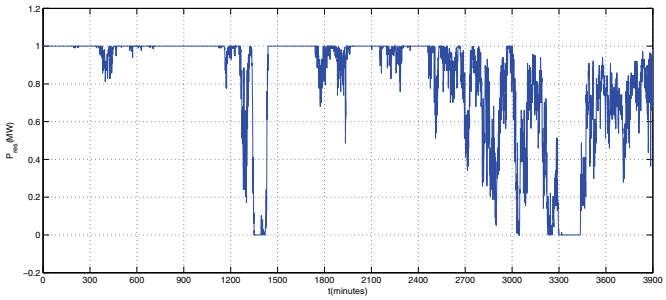

Fig. 5. Power feed to grid by an unregulated wind generator

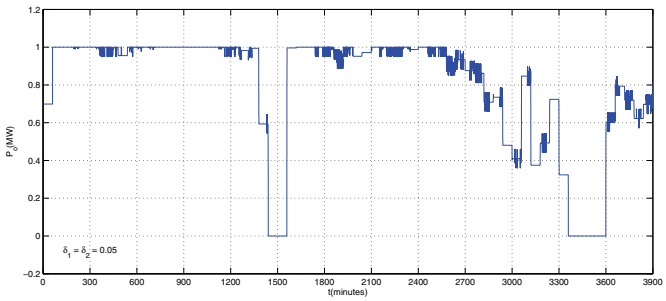

Fig. 6. Simulation results of the regulated system. In each hourly period the power feed to the grid can change at most ±5% of the nominal power.

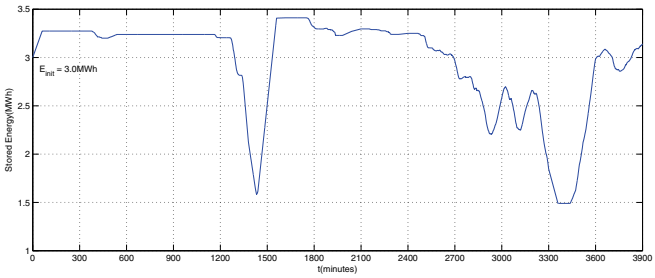

Fig. 7. Simulation results of the regulated system. The stored energy.

and sends the requested power to the storage system to be stored or recovered. It uses the data provided by the Average block that implements the feedback innovation term to correct the states of bias.

The TSO block is mainly a logger of the power feed to the grid. It detects the *in band* and *out band* states according to the Δ parameter, which is defined in the Regulatory Norms of the Electricity Authority, and the planned power for each Market period. The energy feed in the different states is computed by integrating the power.

Energy(MWh)	P(NS)	R(NS)	I(NS)	P	R	I	P(In)	R(In)	I(In)
E_{grid}	546.48	546.48	546.48	526.89	521.56	540.14	519.76	519.73	536.46
E_{out}	270.05	471.36	174.41	7.88	1.25	4.37	0.00	0.00	0.00
$E_{\text{deviation}}$	110.90	132.80	41.84	14.20	5.00	1.58	0.00	0.00	0.00
E_{planned}	546.51	546.63	546.48	540.93	525.81	540.90	519.68	518.67	534.78
E_{init}	-	-	-	3.00	3.00	3.00	3.00	3.00	3.00
E_{end}	-	-	-	0.43	2.11	0.01	2.95	3.32	2.86
E_{max}	-	-	-	3.00	5.00	3.42	3.52	3.59	3.48
E_{min}	-	-	-	0.00	0.00	0.00	0.73	0.92	2.45

P: Persistence, R: Reference Model, I: Ideal Forecasting, NS: No Storage, In: Innovation

Table 3. Quality Parameters

3.2 Results in energy storage

The first test performed on the system was the computation of the results of the TSO block without any storage system. This test provided the raw quality factors corresponding to the RES generator. The test was based on a time series of 791 hours. The first three columns on Table 3, with the label no storage(NS), contain the energy values for the three forecasting strategies, P(Persistence), R(Reference Model) and I(Ideal). An unexpected conclusion that can be obtained is that the Reference Model introduced by NielsenNielsen et al. (1998) and MadsenMadsen (2004) has the worst quality values. It has been claimed that it has less error in wind power forecasting than the Persistence Model but it performs worse in terms of the quality of the energy supplied to the grid.

When the storage system is used, the energy provided by the RES generator is managed by the control system. It is stored and recovered according to the defined strategy. It means that some energy amount will be lost due to the efficiency of the storage driver. The use of the storage system provides more quality in the power fed to the grid, at the cost of lower amount of feed energy. The more quality, the less energy is an approach that will be economically feasible depending on the structure of prices, penalties and subsidies of each country.

Figure 5 shows 3900 minutes of the power provided by the RES generator. Figure 6 shows the power feed to the grid with a storage system. The parameters for the control block are: $\delta_1 = \delta_2 = 0.05$, $k_1 = 0.1$, $E_{obj} = 3\,\text{MWh}$ and $P_{\text{min}} = 0.25\,\text{MW}$. The last of those means that no energy is fed with a power lower than $P_{\text{min}} - \delta_2 = 0.2\,\text{MW}$. The parameters of the storage system are $E_{\text{int}} = 3\,\text{MWh}$, $E_{\text{max}} = 5\,\text{MWh}$, $\lambda = 0$ $\eta_r = \eta_s = 0.9$ and no constraint is imposed in the maximum allowable gradient. Figure 6 shows how the power holes of the RES generator are time-delayed in relation to the fed power. This allows the TSO to have the planned power two hours in advance, thus avoiding uncertainty in the planning od the public electricity system.

Table 3 contains the results for a large simulation, the same parameter previously considered with a lower efficiency: $\eta_r = \eta_s = 0.8$, which means a global efficiency of $\eta_s\eta_r = 0.64$. The columns without the label innovation(in) do not use the innovation factor, which means: $k_1 = 0.0$. Other included data are the values of the initial and final energy, as well as the maximum and minimum energy values.

In the columns without the innovation term, the Reference Model performs better than the other forecasting. It has the lowest values in out band and deviation energy. However, it was the more unstable because the storage became full and empty in the simulation. The last three columns have the best performance in quality. The storage was neither full nor empty, and also the final storage capacity was also close to the initial one. This means that the storage was always in the linear zone and the out band and deviation energies were null. However, the

energy amount fed to the grid was lower in the three cases than in the same strategies in the previously considered groups.

In the performed experiment, which concern to 1 MW of power, the storage of 5 MWh in capacity was sufficient except in the case of the Reference Model without innovation, where there is an overflows. These results are consistent with the analysis by ButlerButler (1994) that evaluated the storage needed for several tasks in the electric system. For spinning reserves between 10-100 MW that author estimated about one half hour; for local frequency regulation related to 1 MW one hour and for a renewable application of 1 MW, 1-4 hours, equivalent to 1-4 MWh in line with the simulated results.

4. Conclusions

The short-term forecasting of wind power for Electricity Markets requires two kind of time scales prediction. The first requires detailed prediction for 1-2 days ahead, which needs the cooperation of some tools of NWP. The second is for the time scale of few hours ahead, which can be carried out by using time series analysis. In this time scale, ANN can be applied successfully for wind power forecasting useful in Open Electricity Markets.

This study has used the standard protocols to evaluate the performance of forecasting procedures that some authors have introduced. We have compared the results according these protocol. We have shown that the new reference model, based on the first order Wiener filter, perform better in variance criteria as RMSE and SDE, but it is worse in first order moment as BIAS and MAE. Some ANN architectures, as Recurrent and Feed Forward, have been tested. The main conclusion is that Recurrent architectures have better performance in first and second order statistical moments and can beat the reference model in the range of nowcasting useful in the Electricity Market.

The higher penetration of the RES in the future will introduce high disturbance into the electric systems by increasing the risk of instability. This risk can be avoided by increasing the spinning reserves; that is, by increasing the cost of the public electricity systems. The Electricity Regulations would move toward increasing the effects of the quality parameters in the system of prices and penalties. In addressing those problems, we have defined a mathematical model for energy storage based on general parameterized systems and also constructed a simulator focused on the management of the power and energy. This model can be used as a first level approach to simulate storage systems. With this approach, we avoid the device dependent details to obtain general conclusions about strategies, storage capacity, quality and efficiency. The simulator provides precise data about the increase in quality parameters and the corresponding decreasing in the amount of energy fed to the grid.

5. References

Alexiadis, M., Dokopoulos, P., H.S.Sahsamanoglou & Manousaridis, I. (1998). Short-term forecasting of wind speed and related electric power, *Solar Energy* 63(1): 61–68.

Beaman, B. G. & Rao, G. M. (1998). Hybrid battery and flywheel energy storage system for leospacecraft, *The Thirteenth Annual Battery Conference on Applications and Advances*, pp. 113 – 116.

Butler, P. C. (1994). Battery storage for utility applications: Phase I - oportunities analysis, *Technical Report SAND94-2605*, Sandia National Laboratories.

Demuth, H., Beale, M. & Hagan, M. (2008). *Neural Network Toolbox 6, User's Guide*, The MathWorks, Inc.

Drouilhet, S. (1999). Power flow management in a high penetration wind-diesel hybrid power system with short-term energy storage, *Technical Report CP-500-26827*, NREL.

Edsinger, A. W., Warren, A. W., Gordon, L. H. & C.Chang, G. (1978). SIMWEST - a simulation model for wind energy storage systems, *Proceedings 13th Intersociety Energy Conversion Engineering Conference*, pp. 2108 – 2114.

E.ON-Netz (2004). Wind Report 2004, *Technical report*, EON.

Eriksen, P. B., Ackermann, T., H. Abildgaard, H., P.Smith, Wintera, W. & Garcia, J. M. R. (2005). System operation with high wind penetration, *IEEE Power and Energy Magazine* 3(6): 65–74.

Erlich, I., Winter, W. & Dittrich, A. (2006). Advanced grid requirements for the integration of wind turbines into the German transmission system, *IEEE Power Engineering Society General Meeting*, pp. 7–13.

Fausz, J. L. & Richie, D. J. (2000). Flywheel simultaneous attitude control and energy storage using a VSCMG configuration, *Proceedings IEEE International Conference on Control Applications*, pp. 991 – 995.

Foresee, F. D. & Hagan, M. (1997). Gauss-newton approximation to Bayesian regularization, *Proceedings of the 1997 International Joint Conference on Neural Networks*, pp. 1930Ű–1935.

Giebel, G. (2003). EC Project ANEMOS: The state-of-the-art in short-term prediction of wind power. a literature overview, *Technical report*, Risø National Laboratory.

Hansen, A. D., Sørensen, P., Blaabjerg, F. & Becho, J. (2002). Dynamic modelling of wind farm grid interaction, *Wind Engineering* 26(4): 191–208.

Haykin, S. (1999). *Neural Networs*, Prentice Hall.

Haykin, S. (2001). *Kalman Filtering and Neural Networks*, John Wiley and Sons, Inc.

Hippert, H. S., Bunn, D. W. & Souza, R. C. (2005). Large neural netwoks for electricity load forecasting: Are they overfitted?, *Int. Journal of Forecasting* 21: 425–434.

Kalogirou, S. A. (2001). Artificial neural networks in renewable energy systems applications: a review, *Renewable and Sustainable Energy Reviews* 5: 373–401.

Kandil, N., Wamkeue, R., Saad, M. & George, S. (2006). An efficient approach for short term load forecasting using artificial neural networks, *Electrical Power and Energy Systems* 28: 525–530.

Landberg, L., Giebel, G., Nielsen, H. A., Nielsen, T. & Madsen, H. (2003). Short-term prediction – an overview, *Wind Energy* 6: 273–280.

Lazarewicz, M. L. & Rojas, A. (2004). Grid frecuency regulation by recycling electrical energy in flywheels, *IEEE Power Engineering Society General Meeting*, Vol. 2, pp. 2038–2042.

Levenberg, K. (1944). A method for the solution of certain non-linear problems in least squares, *The Quartely of Applied Mathematics* 2: 164–168.

Li, S. (2003). Wind power prediction using recurrent multilayer perceptron neural network, *IEEE Power Engineering Society General Meeting* 4: 225–230.

Li, S., Wunsch, D. C., OHair, E. & Giesselmann, M. G. (1997). Neural network for wind power generation with compressing function, *IEEE International Conference on Neural Network*, Vol. 1, pp. 115–120.

MacKay, D. J. C. (1992). A practical framework for backpropagation networks, *Neural Computation* 4(3): 448–472.

Madsen, H. (2004). EC Project ANEMOS: A protocol for standardizing the performance evaluation of short-term wind power prediction models, *Technical report*, Technical University of Denmark.

Mandic, D. P. & Chambers, J. A. (2001). *Recurrent Neural Networks for Prediction*, John Wiley and Sons Ltd.

Marquardt, D. (1963). An algorithm for least-squares estimation of nonlinear parameters, *SIAM Journal on Applied Mathematics* 11: 431–441.

Nielsen, H. A. & Madsen, H. (1996). Wind power prediction using arx models and neural networks, *Proceedings of the Fifteenth IASTED International Conference on Modelling, Identification and Control*, p. 310–313.

Nielsen, T. S., Joensen, A., Madsen, H., Landberg, L. & Giebel, G. (1998). A new reference model for wind power forecasting, *Wind Energy* 1: 29–34.

Nielsen, T. S., Madsen, H., Nielsen, H. A., Pinson, P., Kariniotakis, G., Siebert, N., Marti, I., Lange, M., Focken, U., von Bremen, L., Louka, P., Kallos, G. & Galanis, G. (2006). Short-term wind power forecasting using advanced statistical methods, *European Wind Energy Conference & Exhibition 2006*.

Panteri, E. (2008). EC Project STORIES. Set of the existing regulations and legislative framework related to RES implementation, http://wwww.storieproject.eu.

Tande, J. O. G., Muljadi, E., Carlson, O., Pierik, J., Estanqueiro, A., Sørensen, P., OŠMalley, M., Mullane, A., Anaya-Lara, O. & Lemstrom, B. (2007). Dynamic models of wind farms for power system studies. IEA wind annex XXI, *Technical report*, IEA.

Wilson, B. C., Babuska, B., Potter, C. & Fausz, J. L. (2005). Power system design for a spacecraft simulator using energy storage flywheels, *3rd International Energy Conversion Engineering Conference*.

Zhang, G. P., Patuwo, B. E. & Hu, M. Y. (2001). A simulation study of artificial neural networks for nonlinear time-series forecasting, *Computers & Operations Research* 28: 381–396.

Zhang, G., Patuwo, B. E. & Hu, M. Y. (1998). Forecasting with artificial neural networks: The state of the art, *Int. Jorunal of Forecasting* 14: 35–62.

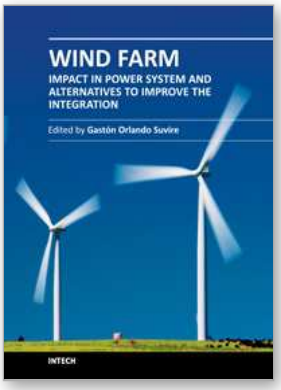

Wind Farm - Impact in Power System and Alternatives to Improve the Integration

Edited by Dr. GastÃ³n Orlando Suvire

ISBN 978-953-307-467-2
Hard cover, 330 pages
Publisher InTech
Published online 28, July, 2011
Published in print edition July, 2011

During the last two decades, increase in electricity demand and environmental concern resulted in fast growth of power production from renewable sources. Wind power is one of the most efficient alternatives. Due to rapid development of wind turbine technology and increasing size of wind farms, wind power plays a significant part in the power production in some countries. However, fundamental differences exist between conventional thermal, hydro, and nuclear generation and wind power, such as different generation systems and the difficulty in controlling the primary movement of a wind turbine, due to the wind and its random fluctuations. These differences are reflected in the specific interaction of wind turbines with the power system. This book addresses a wide variety of issues regarding the integration of wind farms in power systems. The book contains 14 chapters divided into three parts. The first part outlines aspects related to the impact of the wind power generation on the electric system. In the second part, alternatives to mitigate problems of the wind farm integration are presented. Finally, the third part covers issues of modeling and simulation of wind power system.

How to reference

In order to correctly reference this scholarly work, feel free to copy and paste the following:

Javier Lorenzo and Juan Mendez (2011). Short-Term Advanced Forecasting and Storage-Based Power Quality Regulation in Wind Farms., Wind Farm - Impact in Power System and Alternatives to Improve the Integration, Dr. GastÃ³n Orlando Suvire (Ed.), ISBN: 978-953-307-467-2, InTech, Available from: http://www.intechopen.com/books/wind-farm-impact-in-power-system-and-alternatives-to-improve-the-integration/short-term-advanced-forecasting-and-storage-based-power-quality-regulation-in-wind-farms-

INTECH
open science | open minds

InTech Europe
University Campus STeP Ri
Slavka Krautzeka 83/A
51000 Rijeka, Croatia
Phone: +385 (51) 770 447
Fax: +385 (51) 686 166
www.intechopen.com

InTech China
Unit 405, Office Block, Hotel Equatorial Shanghai
No.65, Yan An Road (West), Shanghai, 200040, China
中国上海市延安西路65号上海国际贵都大饭店办公楼405单元
Phone: +86-21-62489820
Fax: +86-21-62489821